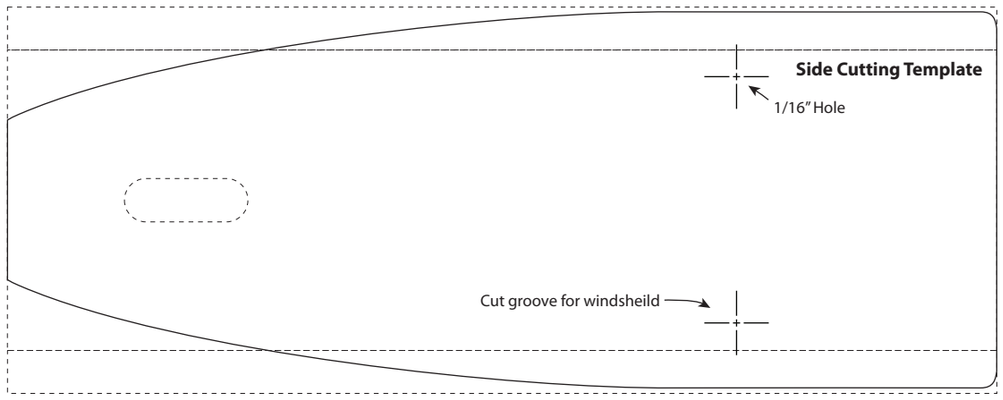
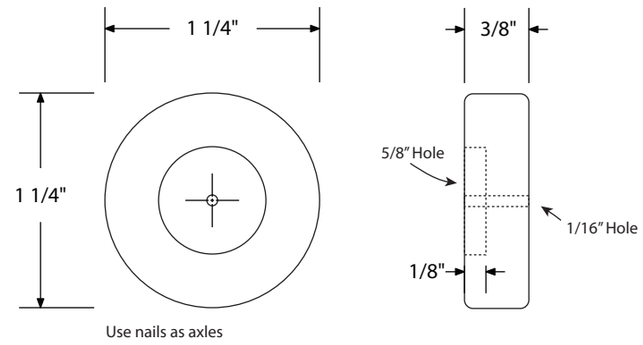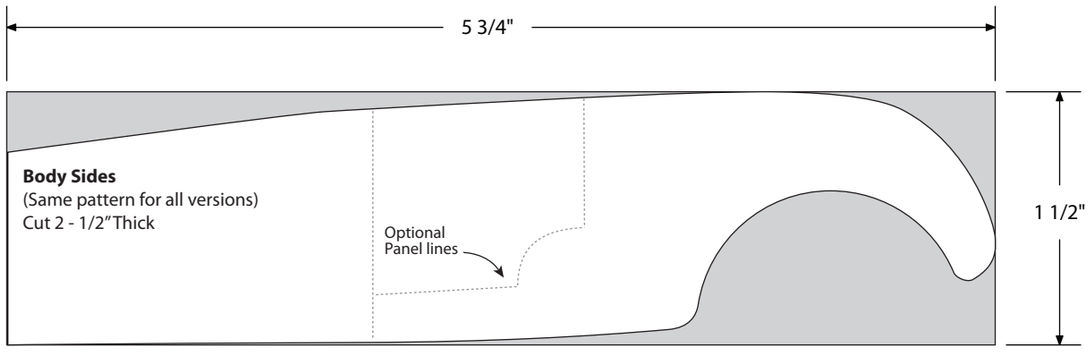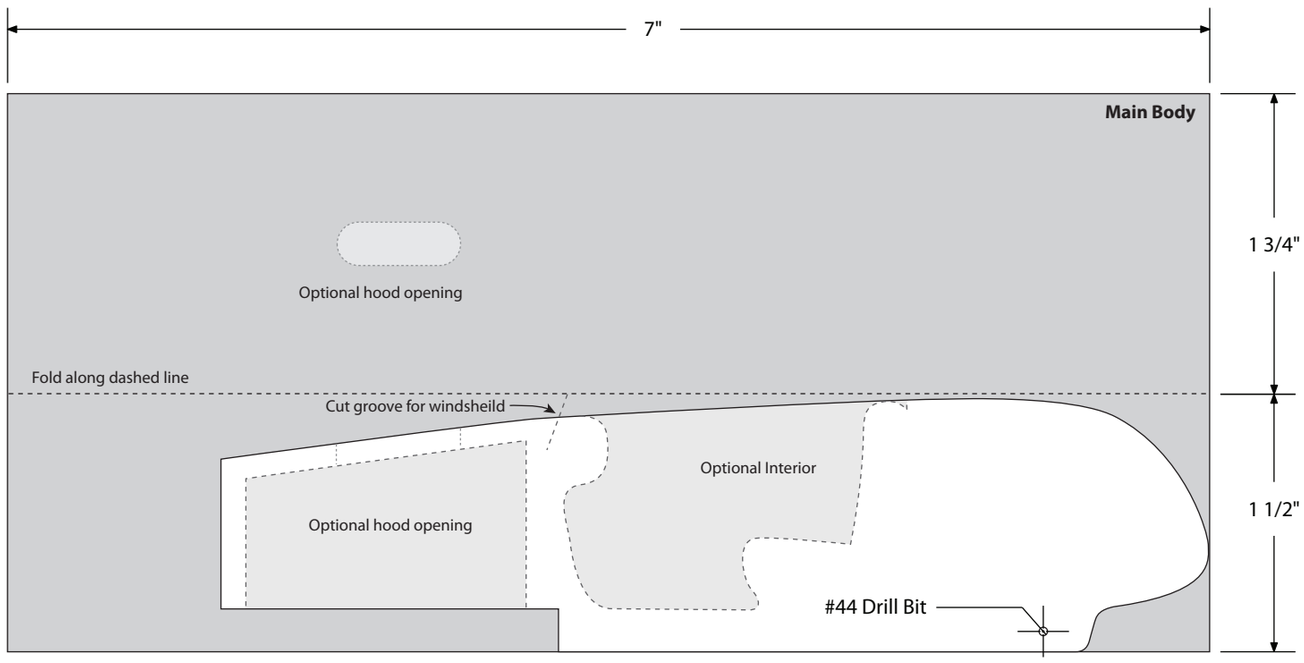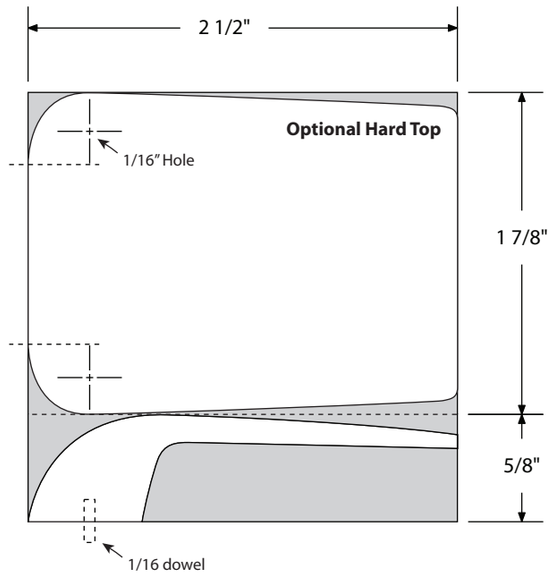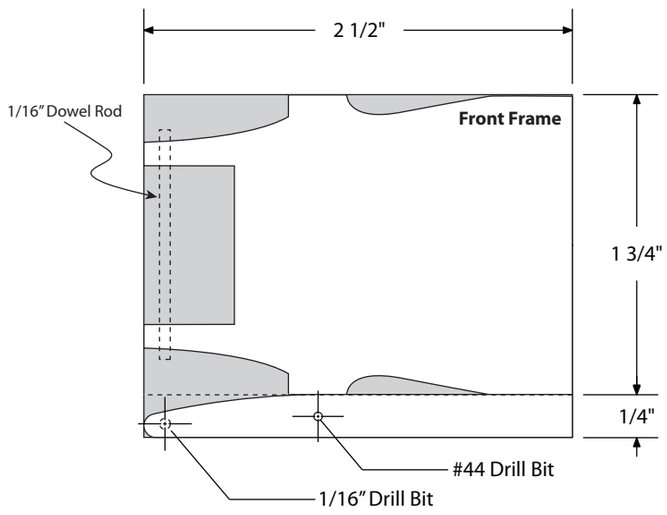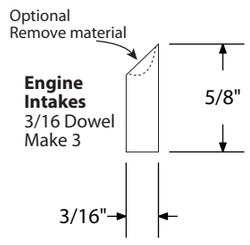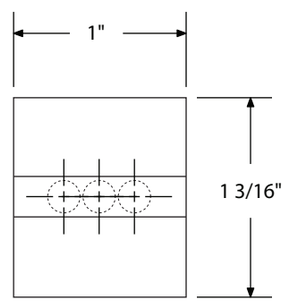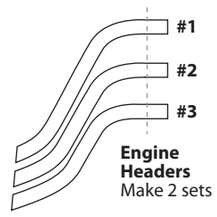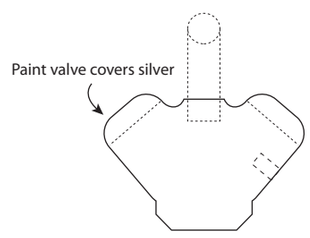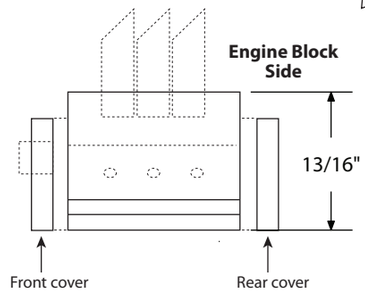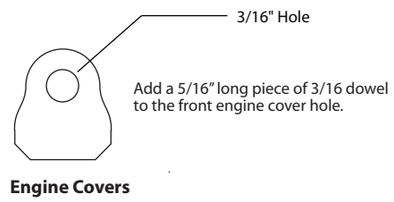
Optional Wooden Wheels