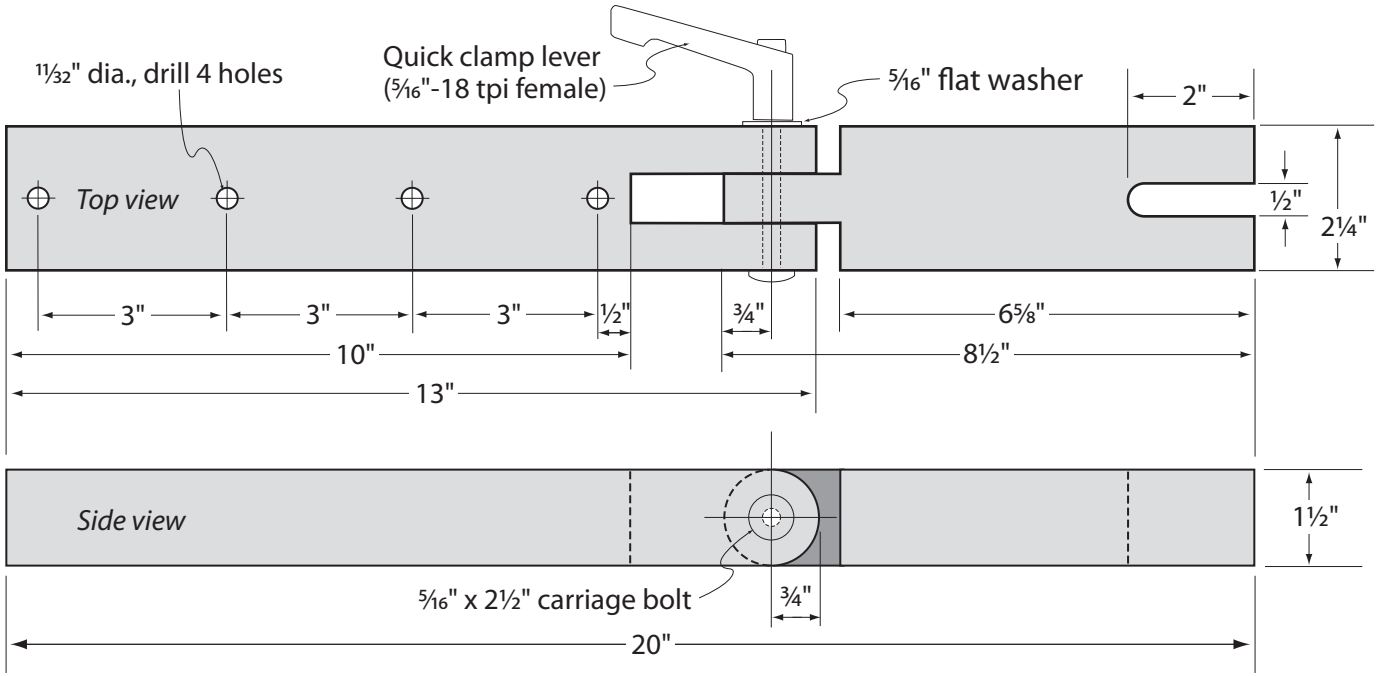
11/32" dia., drill 4 holes
Quick clamp lever
(5/16"-18 tpi female)
5/16" flat washer
2"
Top view
1/2"
2 1/4"
3"
3"
3"
1/2"
3/4"
6 5/8"
10"
8 1/2"
13"
Side view
1 1/2"
5/16" x 2 1/2" carriage bolt
3/4"
20"